LAKE PLACID

(Sunset Strait)

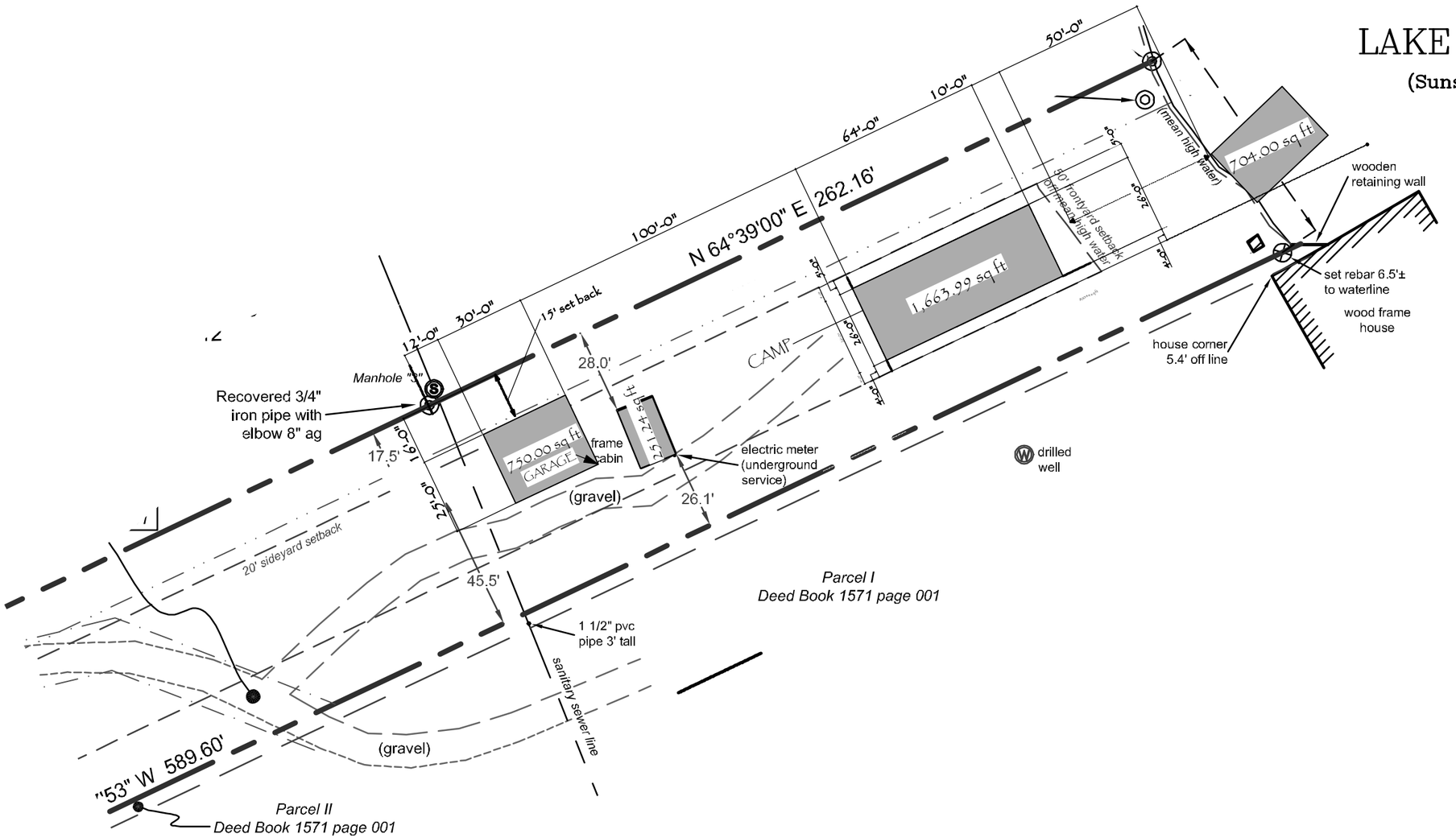

lands now or
under

SITE PLAN

SCALE:
1"=40'-0"

ADK DRAFTING SERVICES
98 ROCKLEDGE LANE
SARANAC LAKE, NY. 12983
e-mail: adkdrafting04@yahoo.com TEL: 518-891-4126

Mr. TODD KEMP and BRIAN BOYER
LAKE PLACID, NY. 12946

25 POINT OF VIEW-NEW CAMP
LAKE PLACID, NEW YORK
DESIGN DEVELOPMENT
#05

SITE PLAN

Scale: As Noted
Drawn By: IVANA
Date: 09/19/20
Project Number: #Pln

12

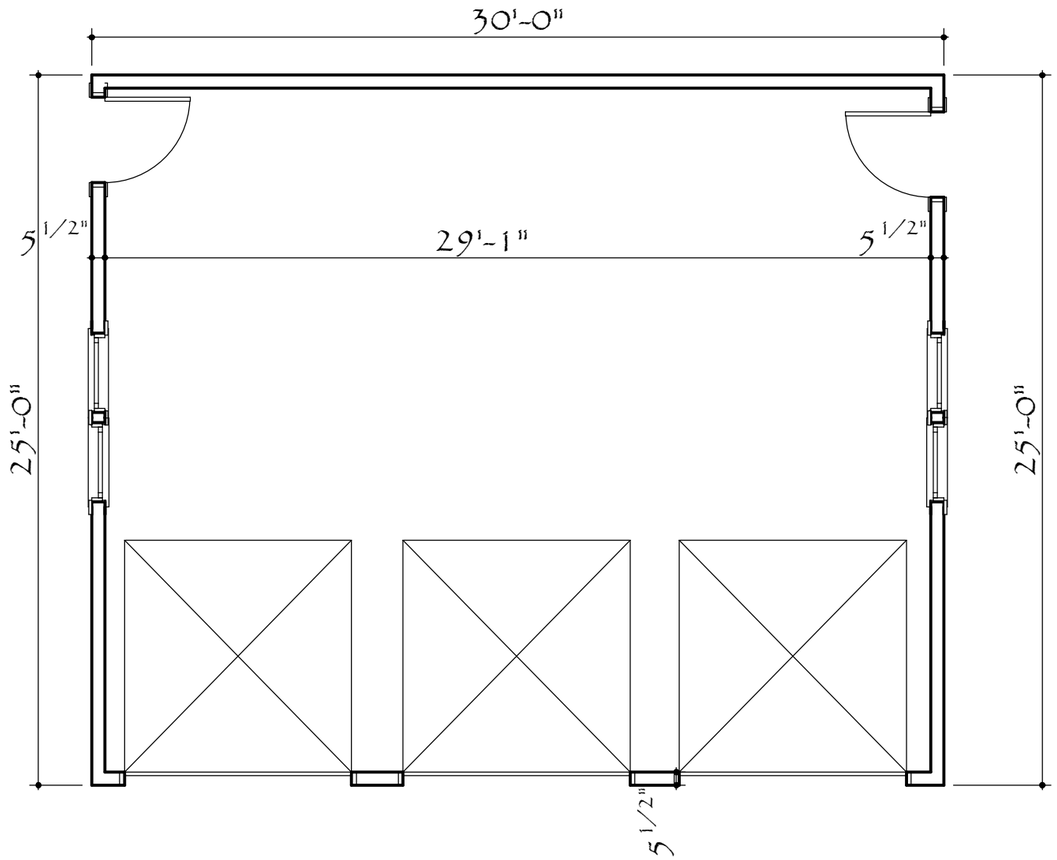

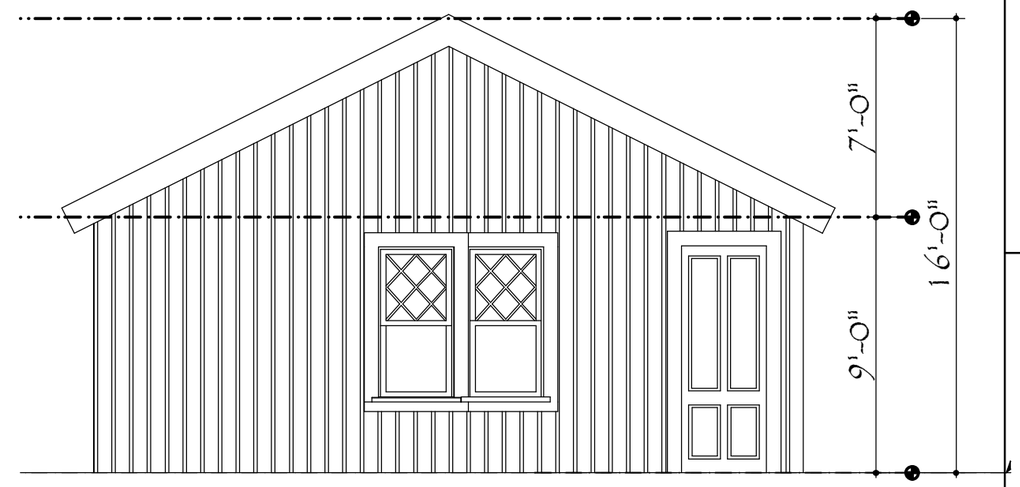

3/16" = 1'-0"

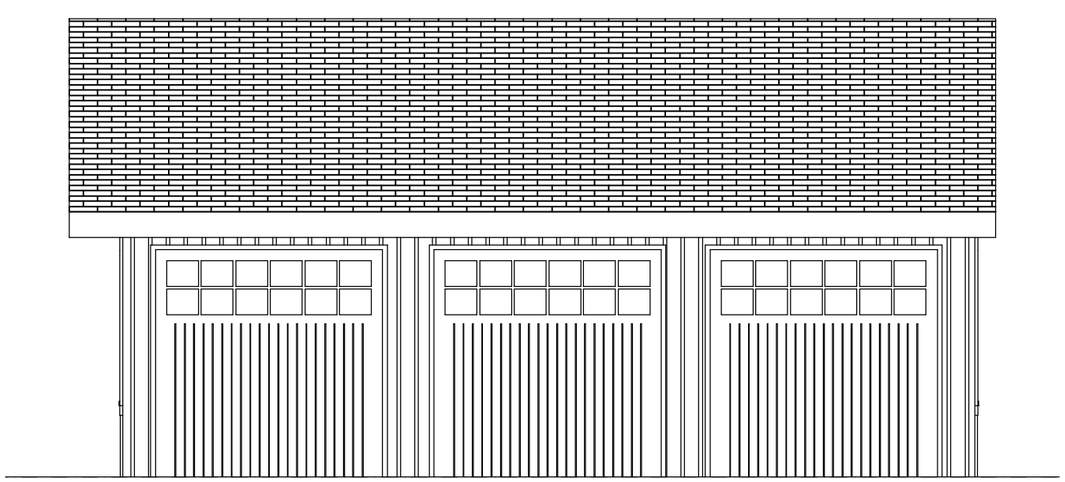

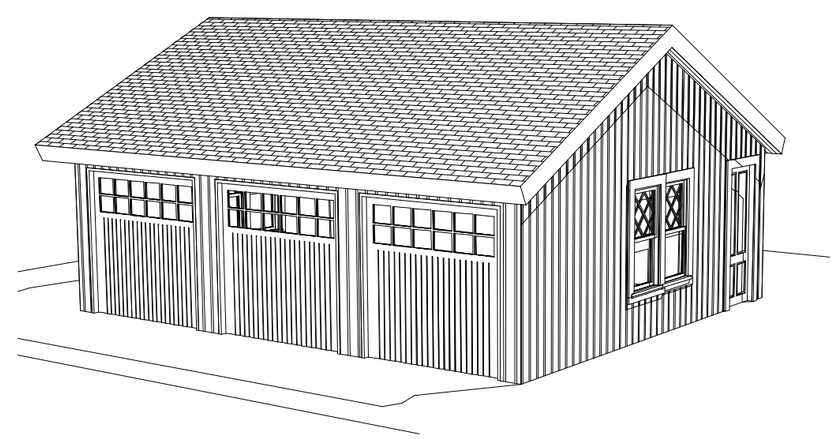

ADK DRAFTING SERVICES
98 ROCKLEDGE LANE
SARANAC LAKE, NY. 12983
e-mail: adkdrafting04@yahoo.com TEL: 518-891-4126

Mr. TODD KEMP and BRIAN BOYER

LAKE PLACID, NY. 12946

25 POINT OF VIEW-NEW CAMP
LAKE PLACID, NEW YORK
DESIGN DEVELOPMENT
#03

GARAGE

Scale: As Noted
Drawn By: IVANA
Project Number: #Pln
Date: 09/19/20

13